HACO part no. 1007015H

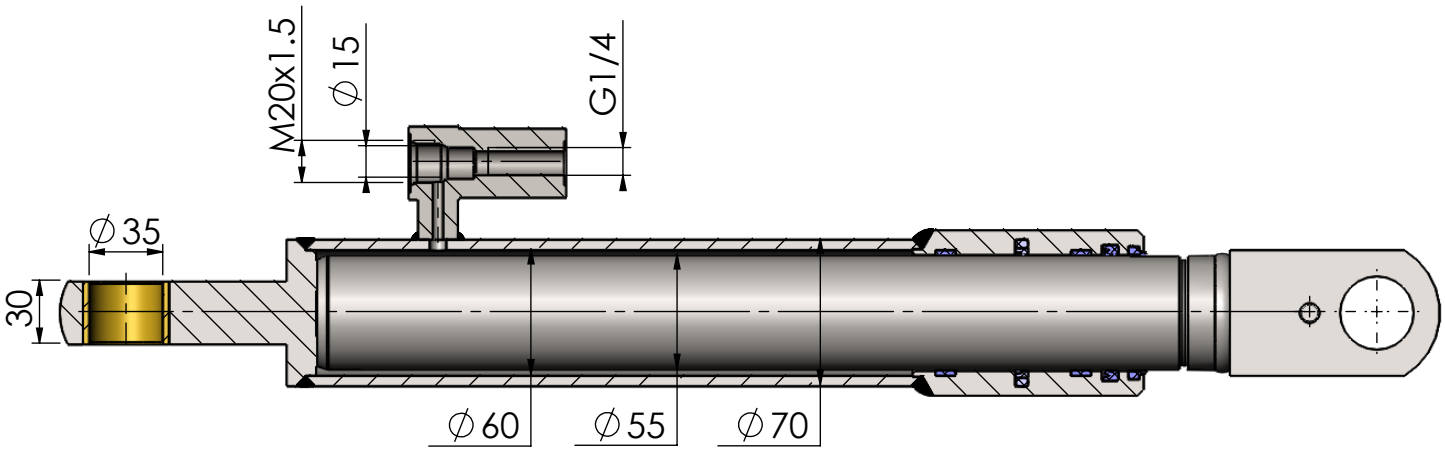

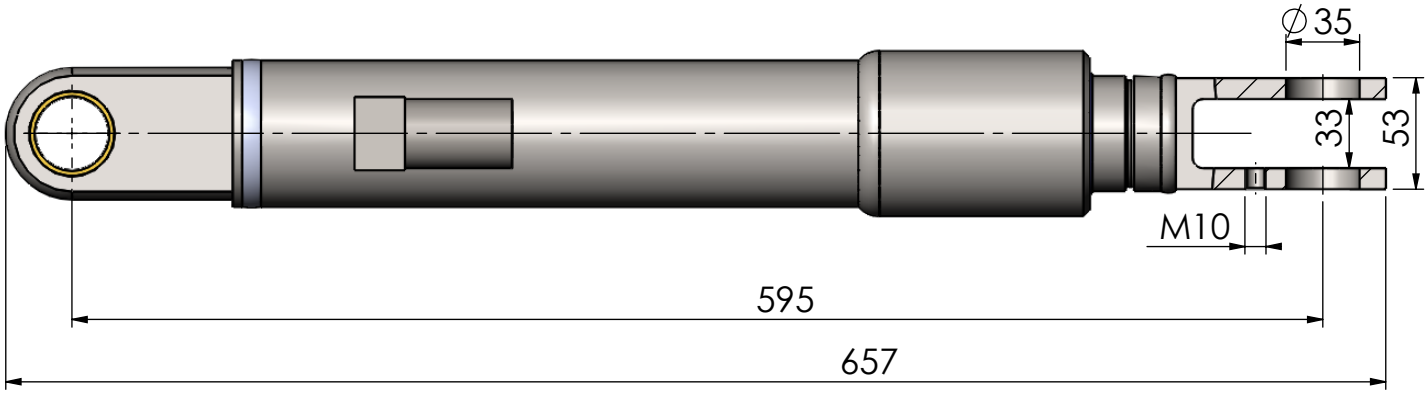

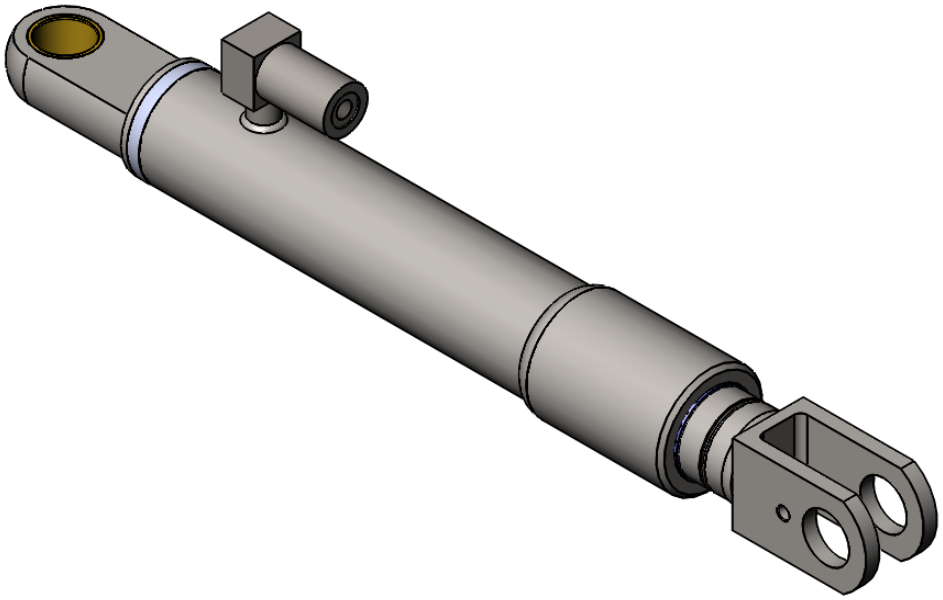

HACO TAIL LIFT PARTS

Liftcylinder HACO DLB47 Ø55mm
suitable for Dautel