HACO part no. 1007016H

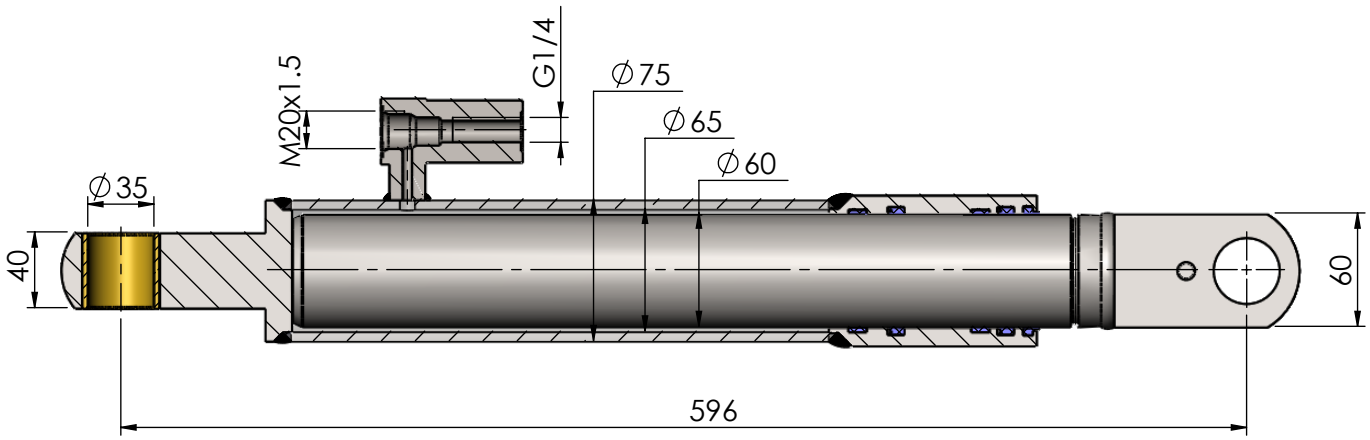

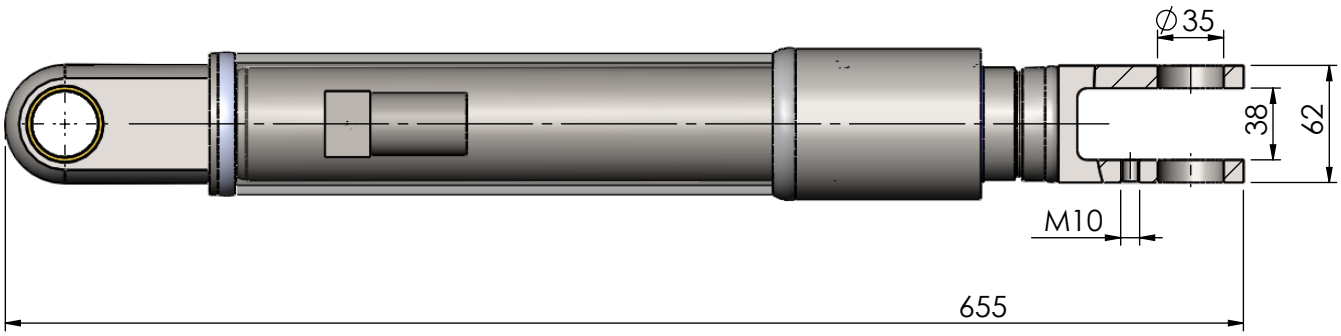

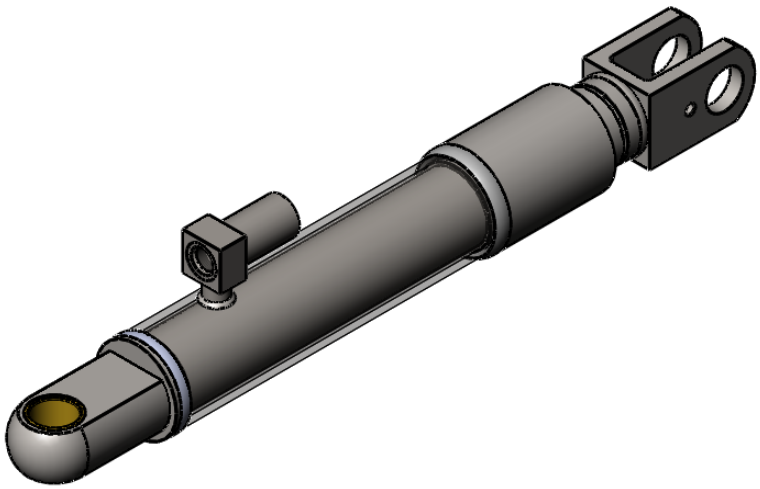

Liftcylinder HACO DLB47 Ø60mm suitable for Dautel

HACO
TAIL LIFT PARTS