HACO part no. 1007017H

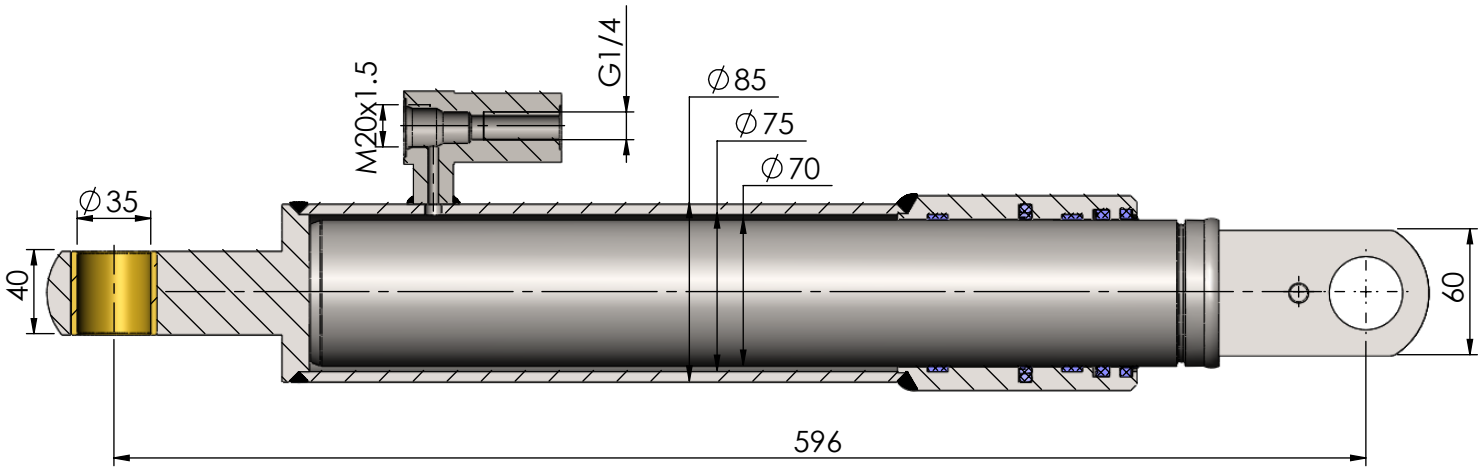

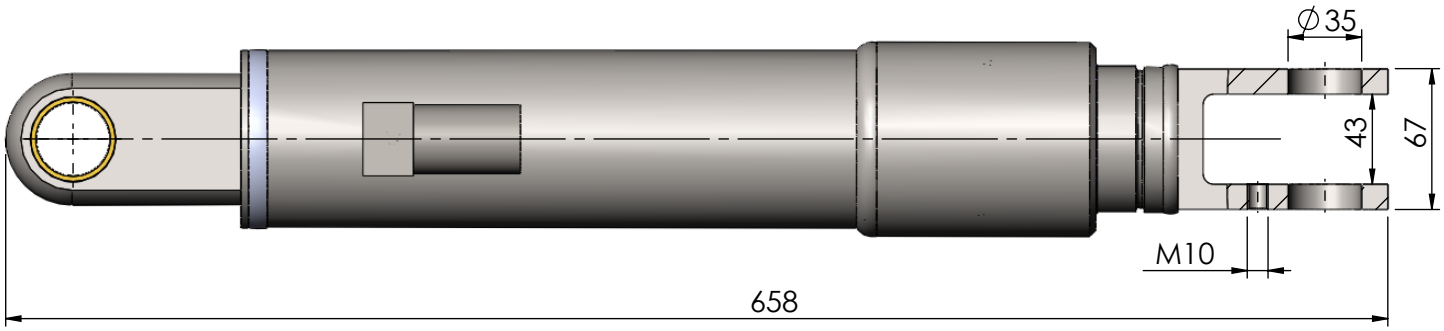

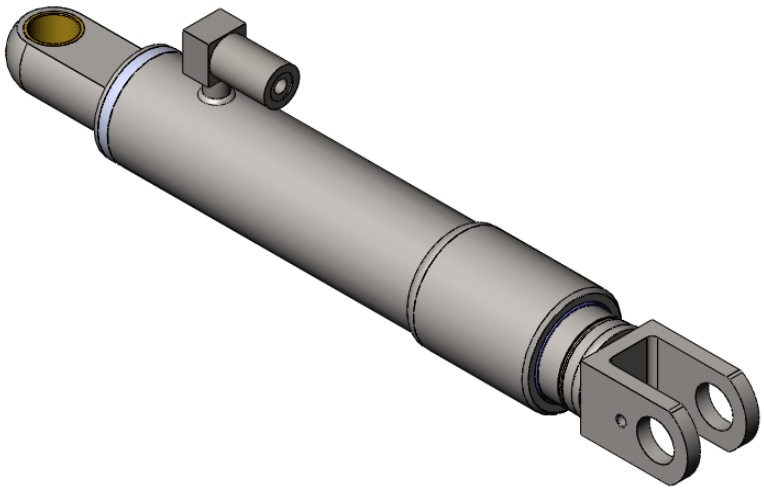

Liftcylinder HACO DLB47 Ø70mm suitable for Dautel

HACO
TAIL LIFT PARTS