HACO part no. 1019563H

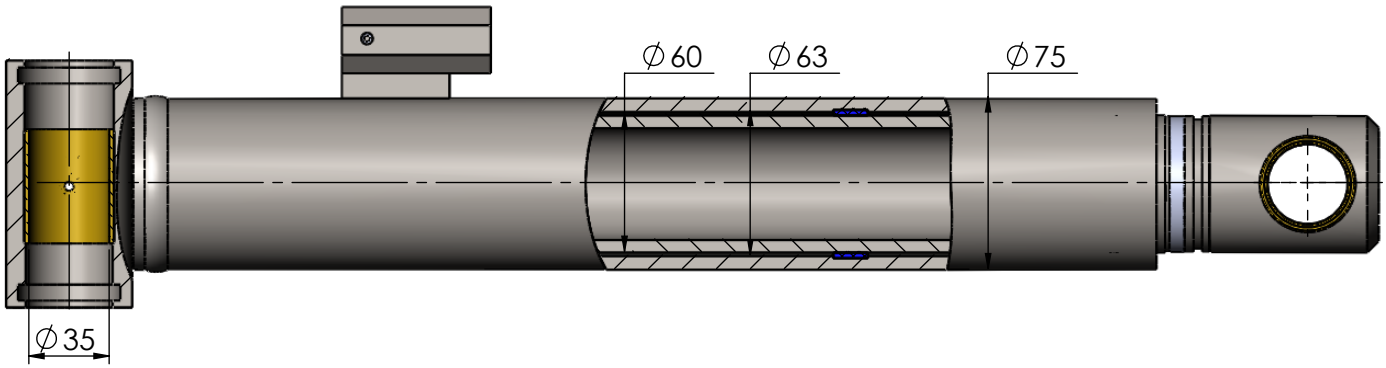

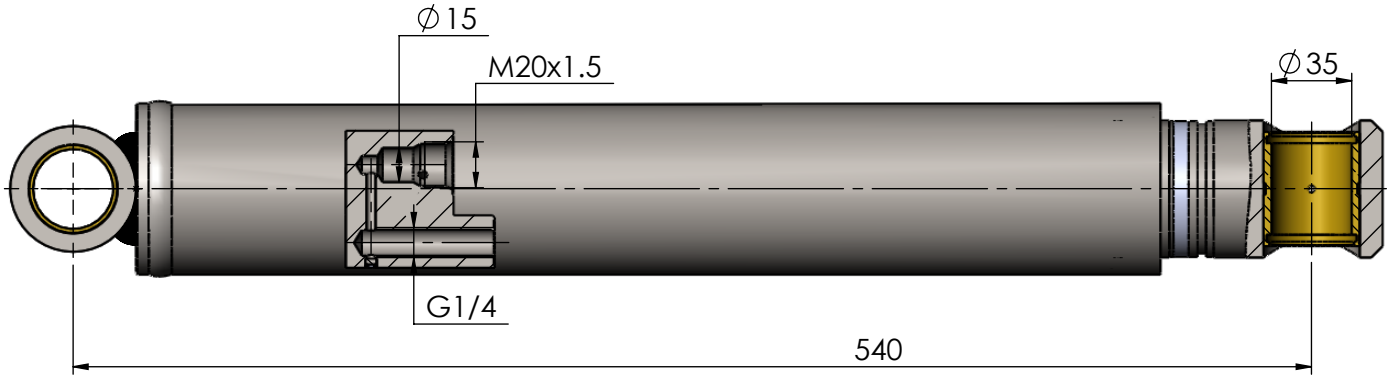

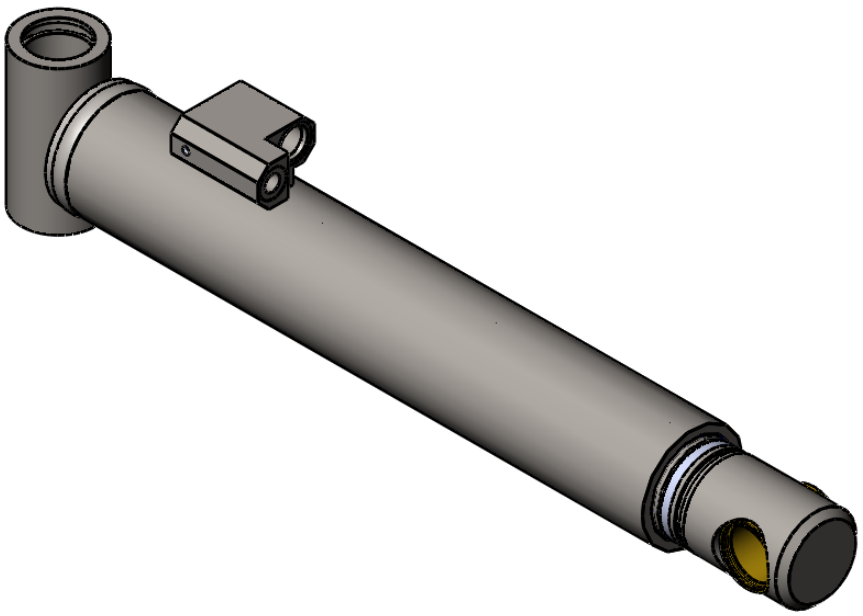

Liftcylinder HACO Ø60-285 suitable for Bär Cargolift

HACO
TAIL LIFT PARTS