HACO part no. 1019565H

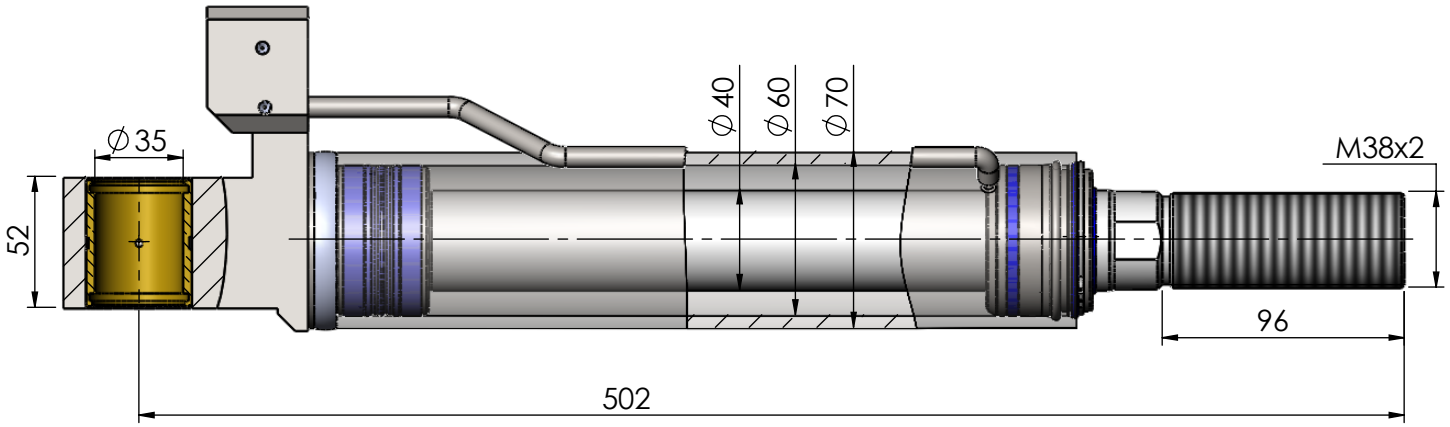

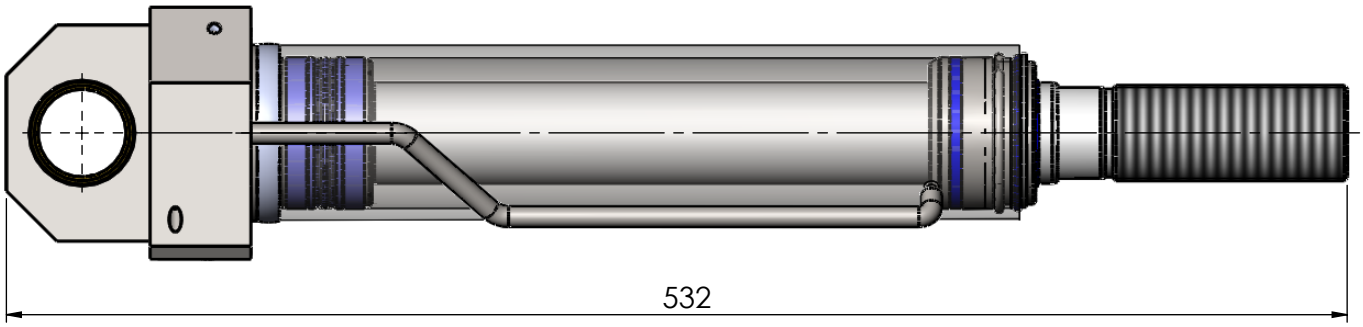

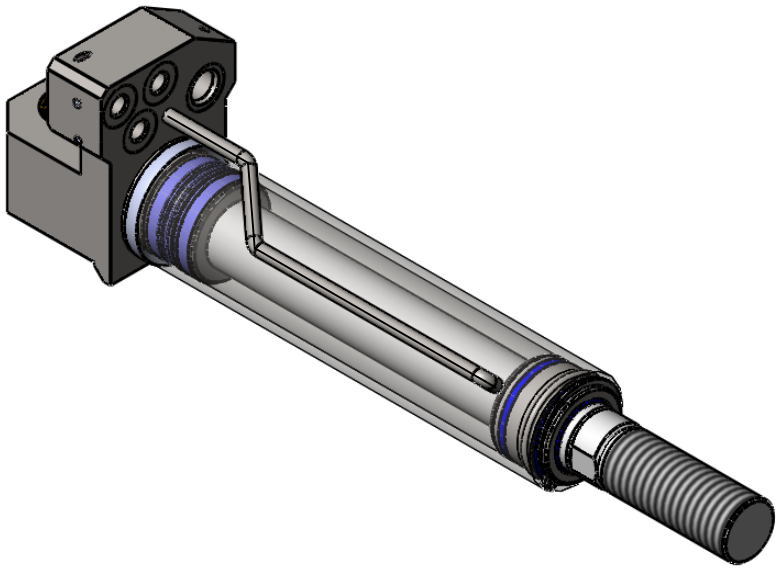

Tiltcylinder HACOØ40/60-220 suitable for Bär Cargolift

HACO
TAIL LIFT PARTS