HACO part no. 1007111H

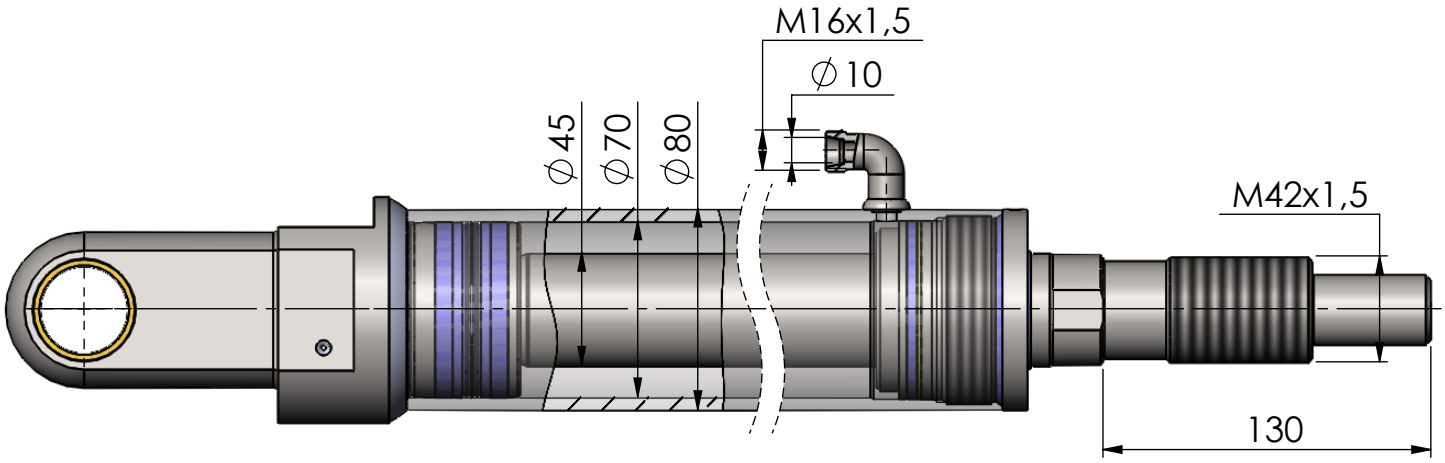

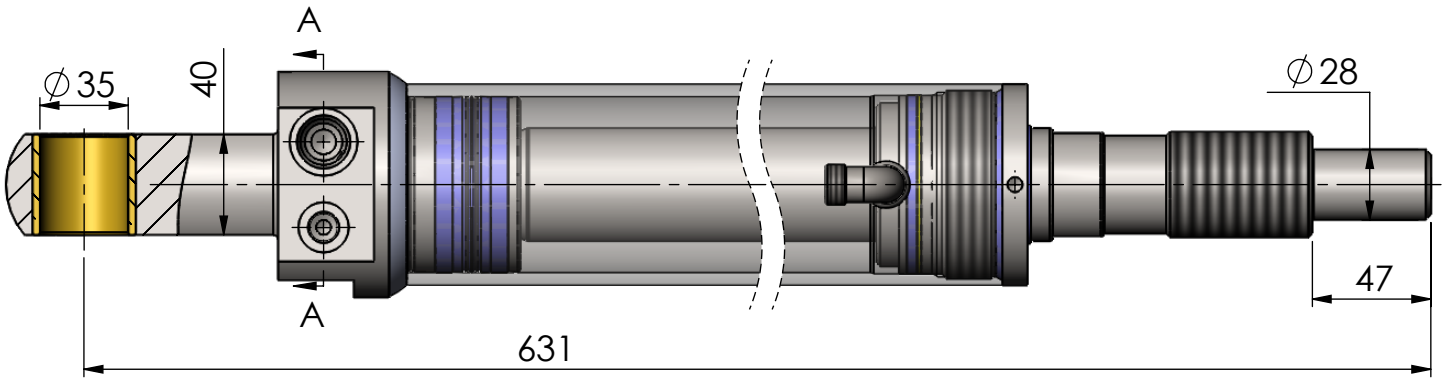

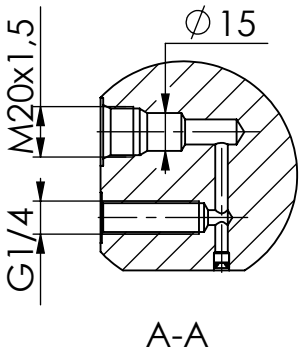

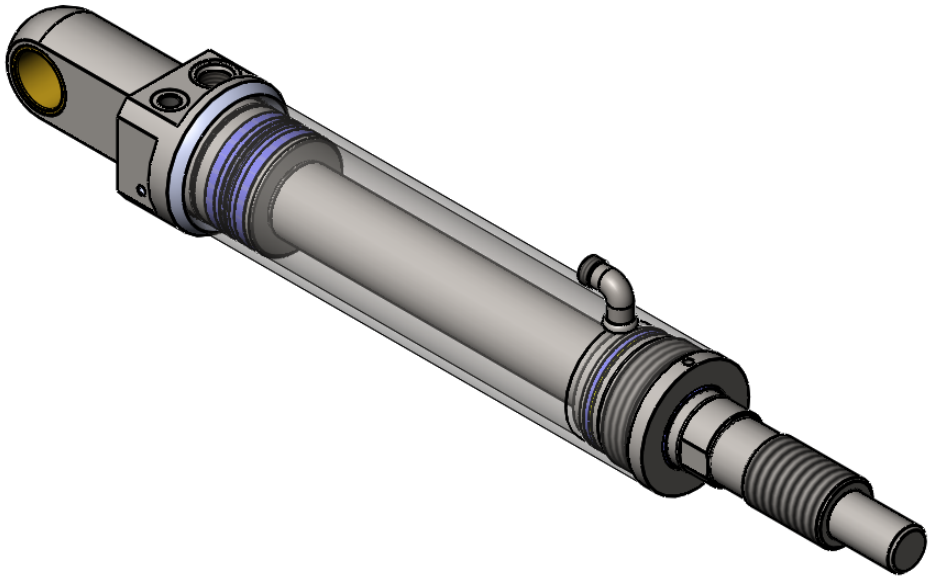

Tiltcylinder HACO DLB47 Ø45/70mm
suitable for Dautel