HACO part no. 1014936H

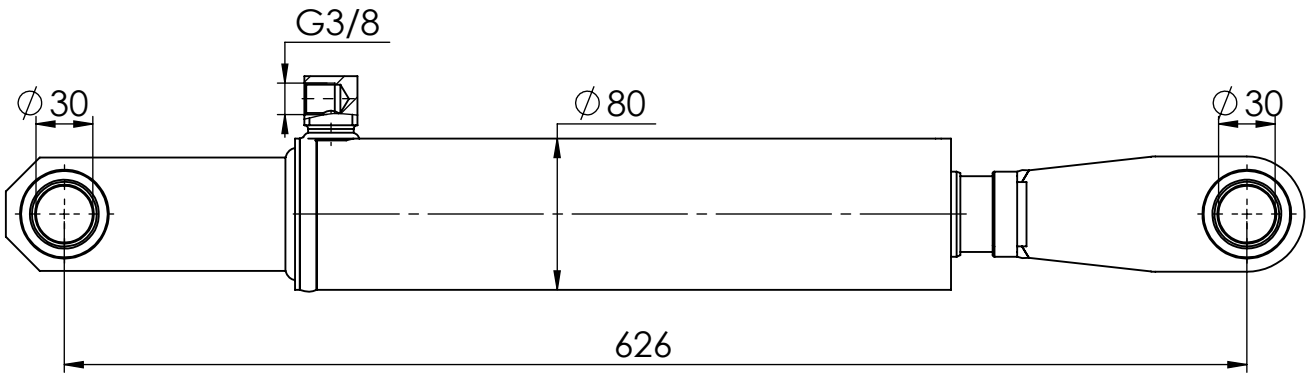

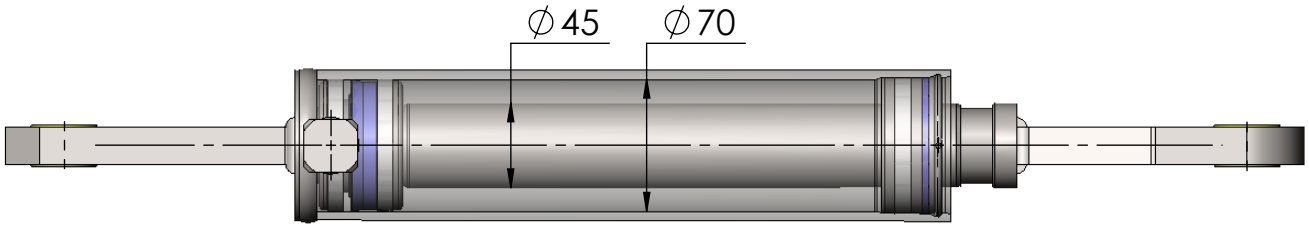

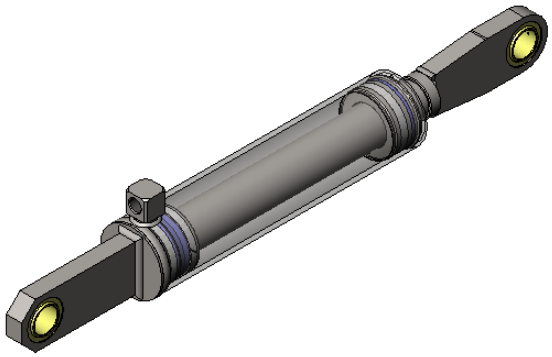

HACO TAIL LIFT PARTS

Liftcylinder HACO BZ/RZ-15-130S,T
suitable for Zepro