HACO part no. 1019546H

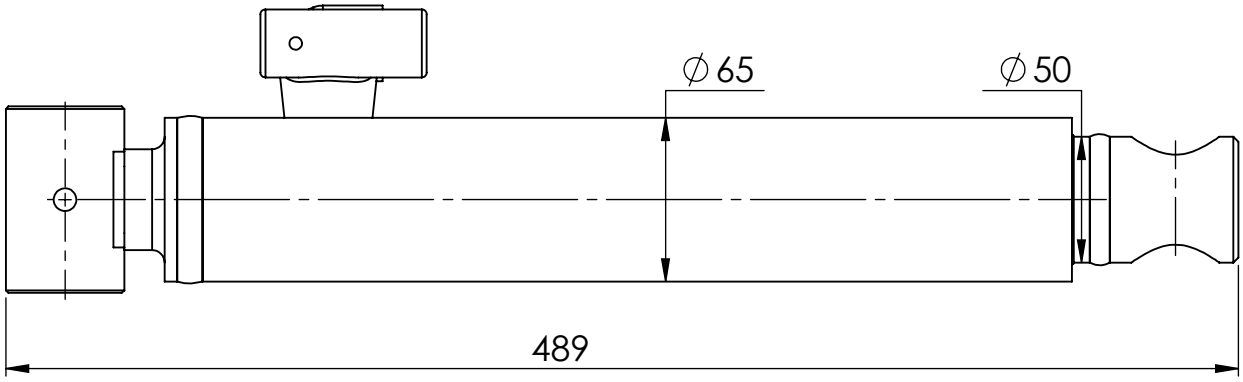

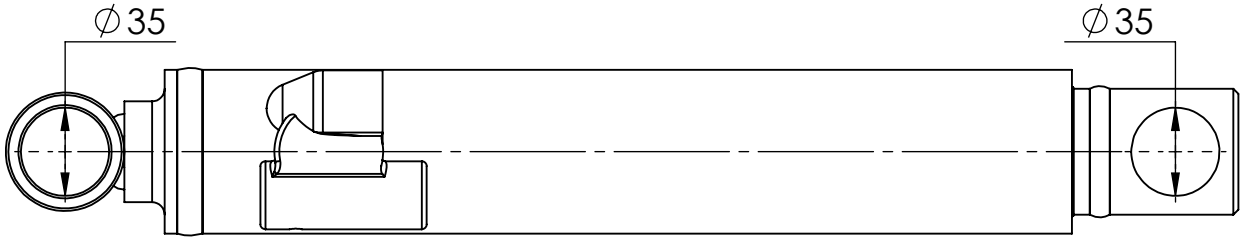

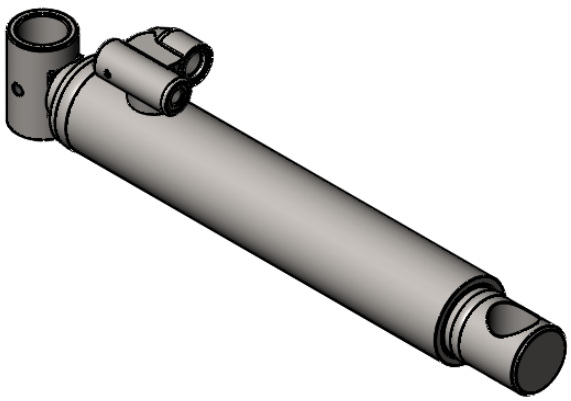

HACO
TAIL LIFT PARTS