HACO part no. 1059208H

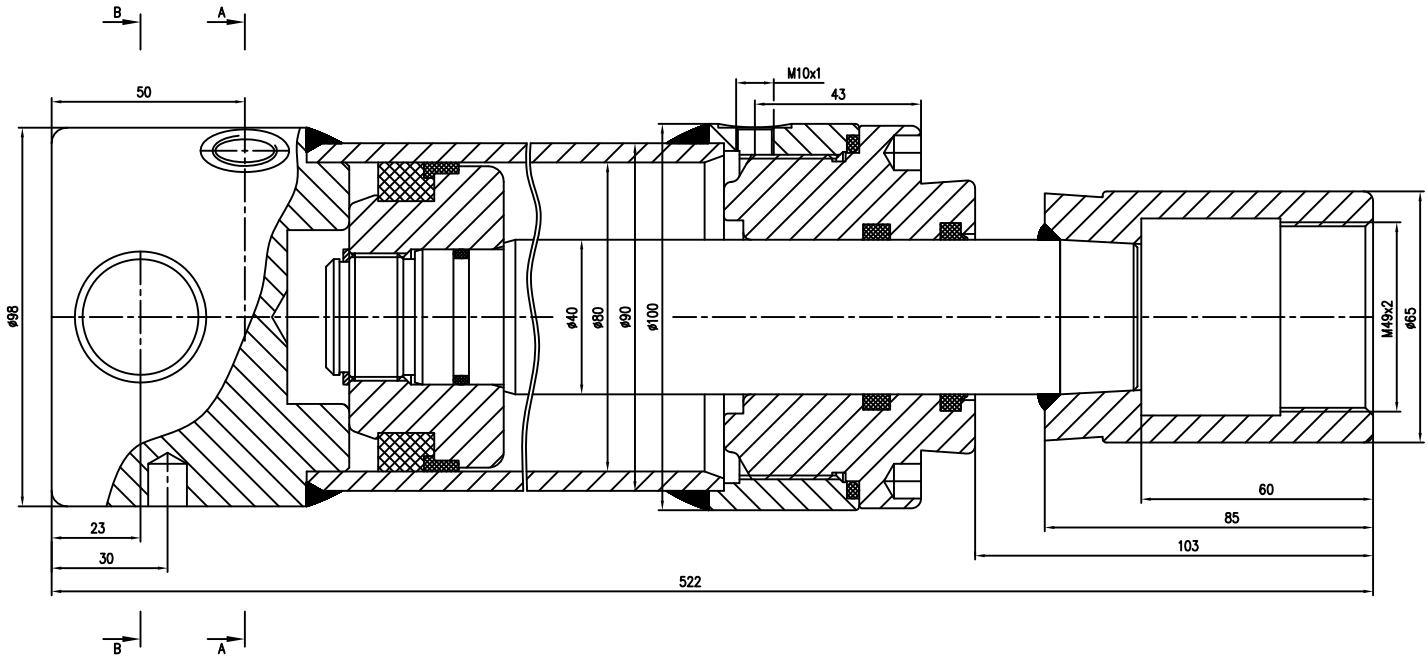

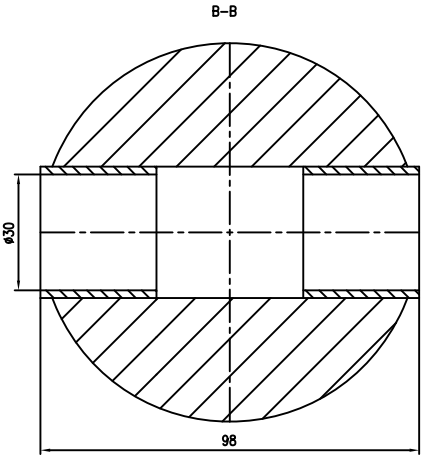

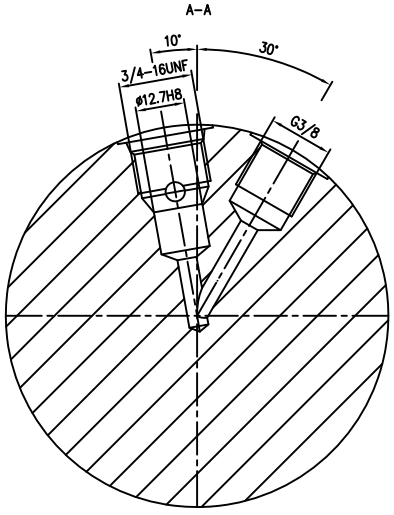

Tiltcylinder HACO SC8 SKS236 Ø80
suitable for Dhollandia

HACO
TAIL LIFT PARTS